DAH Solar

INSTALLATION MANUAL FOR DAH SOLAR PV MODULES

Thanks For Reading

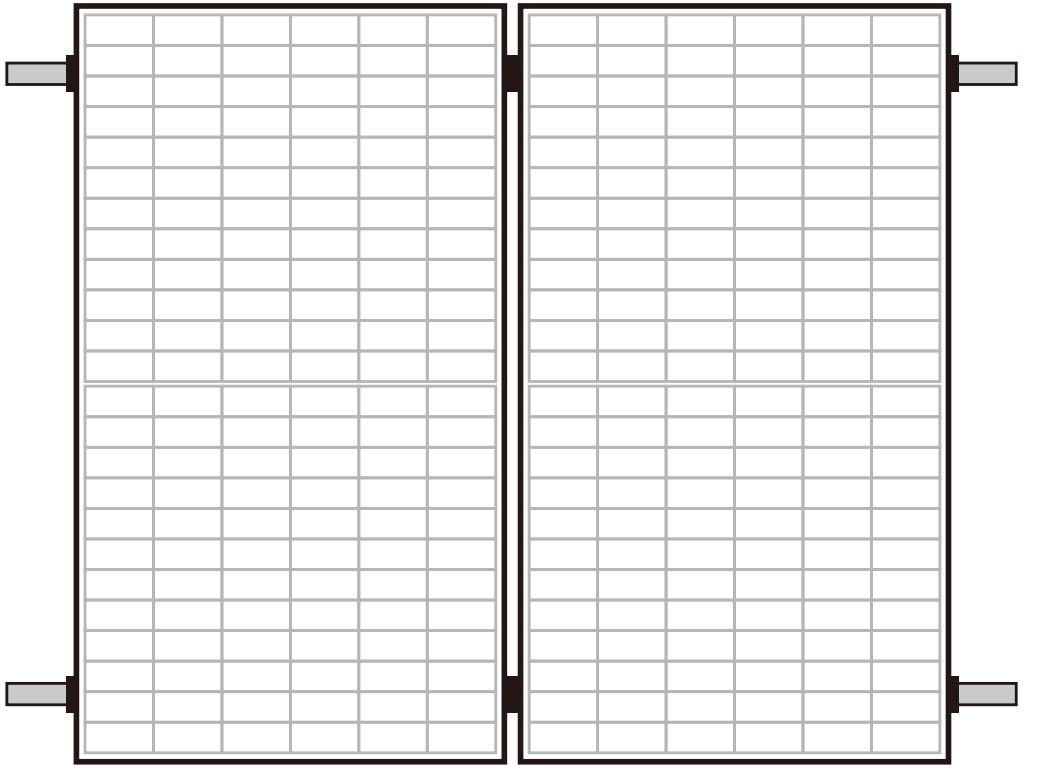

VERSION: 2024-10

Basic Information

1.1 Overview

First of all, thank you for choosing the PV modules developed and manufactured by DAH Solar Co., LTD (herein–after referred to as "DAH Solar").

To ensure proper operation and application safety during product use, please carefully read the " Installation Manual for DAH Solar Modules" before using this product.

To ensure that the current and voltage values generated after the product installation and connection are within the applicable range of the array, please consider the actual current and voltage limits of each array. The maxi–mum system voltage that the PV module can withstand is 1500V DC. In special scenarios such as roof installa–tions, the modules must be installed on fire–resistant roofs. You can consult the local construction department to determine the appropriate roof material.

The application class of the PV module specified in this manual is Class A: hazardous levels of voltage (IEC 61730: above 50V DC; EN 61730: above 120V) and power (above 240W). According to the EN IEC 61730–1 and –2 standards, the module should meet the safety requirements and be classified as Class II.
(Note: PV modules are electricity–generating products. To avoid safety hazards such as electric shock during use, it is necessary to read and understand this installation manual in advance and take necessary safety measures, such as electrical shock prevention.)

1.2 Product application

This manual applies to the following DAH Solar products:

PV Module	Rated Power(W)	Dimension(mm)	Installation hole pitch(mm)
DHN-54X16-(420-445)	420-445	1722*1134*30	1300；1040
DHN-60X16-(450-490)	450-490	1903*1134*30	1300；1040
DHN-72X16-(560-590)	560-590	2279*1134*30	1400；1100
DHN-78X16-(595-635)	595-630	2465*1134*30	1600；1200
DHN-54R18-(445-465)	445-465	1800*1134*30	1300；1040
DHN-60R18-(515-530)	515-530	1994*1134*30	1300；1040
DHN-72R18-(605-630)	605-630	2382*1134*30	1400；790
DHM-54X10-(400-415)	400-415	1722*1134*30	1300；1040
DHM-60X10-(440-460)	440-460	1903*1134*30	1300；1040
DHM-72X10-(540-555)	540-555	2279*1134*30	1400；1100
DHM-78X10-(570-590)	570-590	2465*1134*30	1600；1200
DHN-54X16/DG-(420-445)	420-445	1722*1134*30	1300；1040
DHN-60X16/DG-(450-490)	450-490	1903*1134*30	1300；1040
DHN-72X16/DG-(560-590)	560-590	2279*1134*30	1400；1100
DHN-78X16/DG-(595-635)	595-630	2465*1134*30	1600；1200
DHN-54R18/DG-(445-465)	445-465	1800*1134*30	1300；1040
DHN-60R18/DG-(515-530)	515-530	1994*1134*30	1300；1040
DHN-72R18/DG-(605-630)	605-630	2382*1134*30	1400；790
DHM-54X10/DG-(400-415)	400-415	1722*1134*30	1300；1040
DHM-60X10/DG-(440-460)	440-460	1903*1134*30	1300；1040
DHM-72X10/DG-(540-555)	540-555	2279*1134*30	1400；1100
DHM-54X10/FS-(390-415)	390-415	1722*1134*32	1300；1040
DHM-60X10/FS-(430-460)	430-460	1903*1134*32	1300；1040
DHM-72X10/FS-(530-555)	530-555	2279*1134*32	1400；1140
DHM-T56X10/FS-(420-430)	420-430	1766*1134*32	1300；1040
DHM-T60X10/FS-(430-460)	430-460	1903*1134*32	1300；1040
DHM-T72X10/FS-(520-555)	520-555	2279*1134*32	1400；1140
DHN-54X16/FS-(420-445)	420-445	1722*1134*32	1300；1040
DHN-60X16/FS-(470-485)	470-485	1903*1134*32	1300；1040
DHN-72X16/FS-(560-590)	560-590	2279*1134*32	1400；1140
DHN-T56X16/FS-(440-450)	440-450	1766*1134*32	1300；1040
DHN-T60X16/FS-(430-460)	470-485	1903*1134*32	1300；1040
DHN-T72X16/FS-(520-555)	560-590	2279*1134*32	1400；1140
DHN-54X16/DG/FS-(420-440)	420-440	1722*1134*28	1300；1040
DHN-60X16/DG/FS-(460-490)	460-490	1903*1134*28	1300；1040
DHN-72X16/DG/FS-(570-590)	570-590	2279*1134*28	1400；1140
DHN-54R18/DG/FS-(450-470)	450-470	1800*1134*28	1300；1040
DHN-60R18/DG/FS-(500-525)	500-525	1994*1134*28	1300；1040
DHN-72R18/DG/FS-(610-630)	610-630	2382*1134*28	1400；790
DHN-54R18/FS-(450-470)	450-470	1800*1134*32	1300；1040
DHN-60R18/FS-(500-525)	500-525	1994*1134*32	1300；1040
DHN-72R18/FS-(610-630)	610-630	2382*1134*32	1400；790
DHN-54R20-(450-470)	450-470	1762*1134*30	1300；1040
DHN-60R20-(500-525)	500-525	1994*1134*30	1300；1040
DHN-72R20-(610-630)	610-630	2382*1134*30	1400；790
DHN-54R20/DG-(450-470)	450-470	1762*1134*30	1300；1040
DHN-60R20/DG-(500-525)	500-525	1994*1134*30	1300；1040
DHN-72R20/DG-(610-630)	610-630	2382*1134*30	1400；790
DHN-54R20/FS-(450-470)	450-470	1762*1134*32	1300；1040

DHN-60R20/FS-(500-525)	500-525	1994*1134*32	1300；1040
DHN-72R20/FS-(610-630)	610-630	2382*1134*32	1400；790
DHN-54R20/DG/FS-(450-470)	450-470	1762*1134*28	1300；1040
DHN-60R20/DG/FS-(500-525)	500-525	1994*1134*28	1300；1040
DHN-72R20/DG/FS-(610-630)	610-630	2382*1134*28	1400；790

Note: (1)BW black framed and BB all black models are also applicable;
(2)Due to the R&D and product upgrades, product models will be introduced or updated without prior notice.

General Information

2.1 General safety

The PV modules designed by DAH Solar comply with international standards IEC 61215 and IEC 61730. They are rated as Class A, suitable for systems with DC voltage above 50V or power above 240W. DAH Solar's PV module series products have undergone standard environmental tests as per IEC 61730–1 and IEC 61730–2 and meet the requirements of Class II.

When the modules are installed in scenarios such as building roofs, corrugated steel sheet roofs, or home roofs, factors such as the stability, fire resistance, and load–bearing capacity of the main structure should be consid–ered. Additionally, maintenance access channels should be reserved to ensure the safe operation and maintenance of the power plant.

PV systems on rooftops should only be installed after assessment by construction experts or engineers, with formal and complete structural analysis results confirming their ability to withstand additional system bracket pressure, including the weight of PV modules themselves.

During the construction and maintenance of the power plant, adequate safety measures must be taken while working on the roof to ensure your safety, including but not limited to fall protection, ladders or stairs, and per–sonal protective equipment. Please do not install or handle modules in unfavorable conditions, including but not limited to strong or gusty winds, and wet or sandy roofs.

2.2 Electrical safety

PV modules generate direct current under sunlight conditions. During handling and installation, please wear rubber insulated gloves and other personal protective equipment to avoid the risk of electric shock or burns from touch–ing the metal connectors of the modules.

PV modules generate direct current under sunlight conditions and do not have a switch to directly turn off the power supply. To stop the PV modules from generating electricity under sunlight conditions, you can remove them from the sunlight environment or cover the module surface with opaque materials such as cloth or cardboard. Alternatively, you can place the modules face down on a smooth and flat surface to stop their operation.

(Note: Under direct sunlight, PV modules can generate a DC voltage of 30V or higher, so special attention must be paid to the risk of electric shock.)

To avoid arc and electric shock hazards, do not disconnect electrical connections while they are under load. Incorrect connections can also cause arc and electric shock risks. It is necessary to keep the connectors dry and clean to ensure they are in good working condition. Do not insert other metal objects into the connectors or make electrical connections in any other way. Snow and water in the surrounding environment can reflect light and increase the intensity of illumination, leading to increased current and output power. In addition, in low–tempera–ture environments, module heat losses decrease, resulting in increased voltage and power.

Please perform construction work in dry environmental conditions and ensure the dryness of construction tools while taking insulation protection measures. Avoid construction work after rain or in high humidity conditions to prevent the risk of electric shock, unless appropriate anti–electric shock equipment is worn. When cleaning the modules, follow the cleaning requirements in this manual. (Note: If the module glass or encapsulating material is damaged, wear personal protective equipment and separate the module from the circuit.)

2.3 Operational safety

The PV modules produced by DAH Solar are packaged with film for waterproofing, moisture–proofing, and colli–sion protection before leaving the factory. During transportation and storage, do not randomly open the packaging to avoid the risk of moisture to unconnected components or collision damage to the modules. When transporting or transferring the products, protect the packaging from damage.

When placing the products, handle them with care and avoid direct dropping of the modules. When stacking the modules, do not exceed the maximum number of layers indicated on the packaging box.

Before opening the module's packaging, place the packaging box in a ventilated, rainproof, and dry area. After opening the packaging box, follow the instructions in DAH Solar's packaging box manual.

Please handle the modules correctly. It is strictly prohibited to lift the entire module by grabbing the junction box or cables, stand or walk on the modules, or drop one module onto another. To prevent glass breakage, do not place any heavy objects on the glass. When placing a module on a surface, handle it with care, especially in the corners. Do not attempt to disassemble the module or remove the labels or components on the module. Do not paint or apply any other adhesive on the module surface. It is prohibited to repair glass–damaged modules by oneself or drill holes in the module frame, as it may reduce the frame's load capacity and cause corrosion. Do not scratch the anodized layer on the surface of the aluminum alloy frame, as scratching may cause frame corrosion and affect the load capacity. Discarded modules must be recycled and disposed of by qualified institutions.

2.4 Fire safety

Before installing the modules, please understand and consult local laws and regulations, and comply with the fire safety requirements for buildings. When installing PV modules on rooftops, a layer of fireproof material that meets the required grade must be applied to the roof. Sufficient ventilation must be ensured between the modules and the installation surface. Additionally, the structure and installation method of the roof can also affect the fire safety performance of the building. Improper installation may lead to fire hazards. To maintain the fire rating of the roof, the minimum distance between the module and the roof surface should be 10 cm, and compliant module accessories such as fuses, circuit breakers, and grounding connectors should be used as required by local regula–tions. (Note: Do not use modules in the presence of exposed flammable gases near the installation site to avoid potential risks.)

Installation Conditions

3.1 Installation location and working environment

The PV modules must be installed in safe, stable areas with sunlight exposure, such as deserts, ground surfaces, floating water surfaces, building rooftops, balconies, and carport tops. Also, do not install the PV modules in areas prone to water flooding to prevent the risk of electric shock.

To ensure the normal and safe operation of the PV modules, do not install them in excessive environments such as hail, snow, sandstorms, smoke, air pollution, coal smoke, or areas with strong corrosive substances such as salt, salt spray, saltwater, active chemical vapor, and acid rain. In areas with strong light reflection, such as mirrored reflections from urban glass, avoid direct sunlight reflections or concentrated sunlight from magnifying glasses onto the modules to prevent local overheating, which can cause module short circuits or breakdowns. In areas with frequent lightning activity, proper lightning protection measures must be taken for the modules. Do not install modules in areas where flammable gases are present.

All the PV modules have passed the salt mist corrosion test according to IEC 61701. However, for special environments such as those in contact with seawater, appropriate anti-corrosion measures should still be taken, as corrosion can occur on module frames, bracket connections, grounding connections, and other parts. The normal operating environment for PV modules ranges from -20℃ to 46℃ (monthly average temperature range), with the extreme working temperature range from -40℃ to 85℃. To ensure the load safety of the modules in areas with strong winds and snow, it is necessary to reinforce the stability between the PV modules and the brackets, such as adding additional weight to the brackets or securing the mounting points.

3.2 Selection of tilt angle

To ensure efficient utilization of solar energy resources, select the optimal installation tilt angle for PV modules based on the latitude and longitude of each region during installation. For information on the optimal installation tilt angle for different regions, please refer to the installation guidelines for standard modules or consult the installation provider for the design proposal.

a) For regular PV modules (not Full-Screen), we recommends that the installation angle should not be less than 10 degrees. This way, the surface dust of the modules can be easily carried away by rainwater, reducing the cleaning cost. At the same time, it is beneficial for the accumulated water on the surface of the modules to flow away, avoiding long-term accumulation of water and leaving marks on the glass, which will affect the appearance and performance of the modules.

b) The main characteristic of Full-Screen PV modules is the frameless design on the A-side. In installations with a smaller tilt angle (e.g., corrugated steel sheet roofs, PV carports, sunrooms), it effectively reduces the accumulation of rainwater and dust at the bottom of the modules, minimizing the occurrence of hotspots and snail trails that can affect module performance and lifespan. Additionally, Full-Screen PV modules have a self-cleaning effect through natural rainwater flushing, significantly reducing the frequency of maintenance cleaning for Full-Screen PV module power plants.(Note: PV module installation tilt angle refers to the angle between the module surface and the horizontal plane. Optimal installation tilt angle refers to the angle at which the module receives maximum power output when the angle between the module and direct sunlight is 90°.)

Mechanical Installation

4.1 General requirements

The stability of the power plant requires the design and installation of appropriate PV brackets. The bracket installation contractor must ensure that the modules can withstand all foreseeable load factors, such as strong winds, heavy rains, and other severe weather conditions. The PV brackets selected for the installation of the solar power plant must be inspected and tested by a third-party testing organization with static mechanical analysis capabilities, following local national or international standards such as DIN1055 or equivalent standards. The materials used for the brackets must be durable, corrosion-resistant, and UV-resistant to ensure the structural strength and stability of the brackets.

In areas with heavy snowfall, the installation brackets can be elevated to prevent long-term accumulation of snow, allowing more space for the fallen snow to be stored after sliding off. Furthermore, the lowest point of the modules should be sufficiently high to effectively avoid obstruction by plants, trees, or potential damage from wind-blown debris.

When installing modules on brackets parallel to the roof or wall, a minimum gap of 10 cm should be maintained between the module and the roof or wall to allow for air circulation and prevent damage to the module's wiring. Drilling holes in the glass and frame of the module is strictly prohibited. Before installing modules on the roof, ensure that the building is suitable for installation. Additionally, any roof penetrations must be properly sealed to prevent leaks.

The direction of module installation can be horizontal or vertical. Due to thermal expansion and contraction effects caused by climate and temperature, adjacent modules should have a minimum spacing of 10 mm during installation to prevent frame warping and distortion at low temperatures. It is also important to avoid lateral tension and pressure on the frame to prevent frame detachment or glass breakage due to uneven force distribution. The maximum static loads that the modules can withstand are as follows: 2400Pa on the backside (equivalent to wind pressure) and 5400Pa or 2400Pa on the front side (equivalent to snow pressure and wind pressure), depending on the installation type of the module (refer to the installation methods below). The module installation method should not cause galvanic corrosion between different metal types. The appendix of the UL1703 Standard for Flat-Plate Photovoltaic Modules and Panels recommends that the electrochemical potential difference between contacting metals should not exceed 0.6V.

4.2 Description of installation connection points

Low/normal load conditions suitable for most environmental conditions: The maximum static load the module can withstand on the backside is 2400Pa (equivalent to wind pressure), and the maximum static pressure on the front side is 2400Pa (equivalent to wind pressure and snow pressure).

Higher load conditions suitable for harsh environmental conditions (such as storms and heavy snow): The maximum static load the module can withstand on the backside is 2400Pa (equivalent to wind pressure), and the maximum static pressure on the front side is 5400Pa (equivalent to wind pressure and snow pressure). This is also the highest pressure requirement specified in the IEC standard.

For dynamic loads such as gusts, the safety factor needs to be increased by three times. This means that the maximum withstand capacity for gust wind pressure is ±800Pa, corresponding to wind speeds below 130 km/h.

4.3 Installation of the Modules

The photovoltaic module and the support system can be fixed and installed using the mounting holes on the frame and fixture, following the suggestions depicted in the figure below (Figure 1). If the installation method differs from that illustrated in Figure 1, it is not recommended to fix and install them without authorization. Prior to installation, consult the service personnel of DAH Solar to ensure that your installation solution is safe, stable, and reasonable to avoid component damage or other risks.

4.3.1 Installation with Screws

Fasten the module to the support with bolts through the mounting holes on the back frame of the module, as shown in in Figure 1.

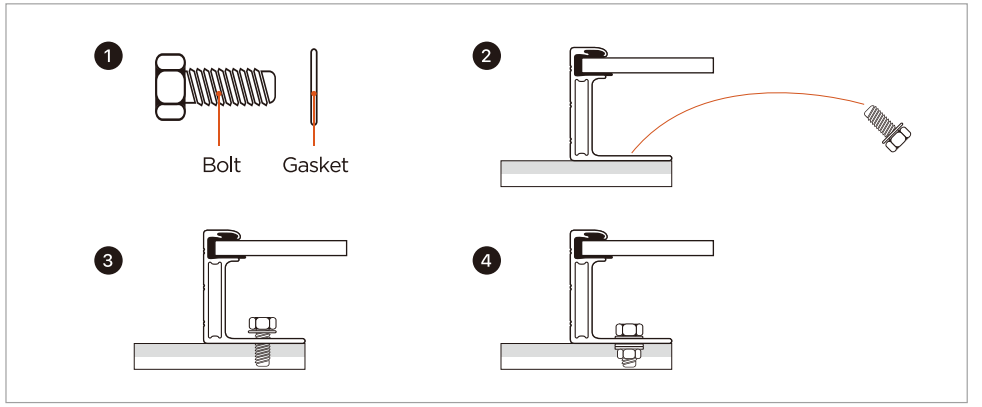

(Figure 1: Installation Diagram)

Recommended accessories:

Accessory name	Bolt	Gasket	Spring gasket	Nut
Material	Stainless steel	Stainless steel	Stainless steel	Stainless steel
Size and length	M8*16mm	M8*1mm	M8*1mm	M8

Note: The torque range for tightening the screws during module installation is 14N.M to 20N.M.

4.3.2 Installation with Fixture

a) The regular module needs to be fixed to the photovoltaic bracket using a metal fixture (the fixture shown in Figure 2 is recommended) or other fixtures that have passed the industry tensile or environmental application test. The fixture is mainly used to secure the photovoltaic module. Therefore, when selecting the appropriate fixture, especially a custom fixture, ensure to conduct the load test on both sides to guarantee the safety and stability of the module.

Standard fixture:

Width: Fixture A length≥50mm, Fixture B length≥50mm； Thickness:≥3mm
Fixture pressing surface length:≥9mm； Material: Aluminum alloy; Bolt: M8
Torque range:16–20N·m

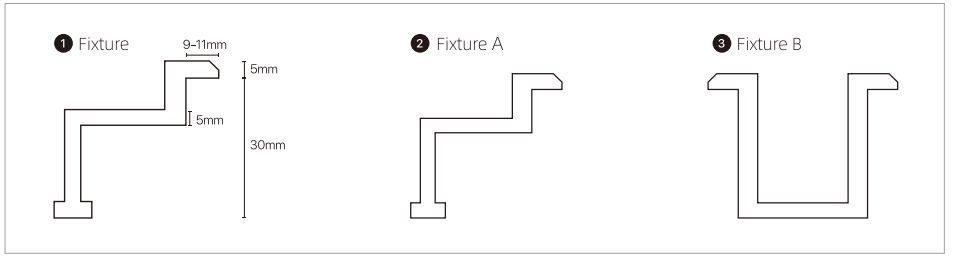

(Figure 2: Fixture Diagram of regular PV Module)

The Full–Screen module needs to be fixed to the photovoltaic bracket using a metal fixture (the fixture shown in Figure 3 is recommended) or other fixtures that have passed the industry tensile or environmental application test. The fixture is mainly used to secure the photovoltaic module. Therefore, when selecting the appropriate fixture, especially a custom fixture, ensure to conduct the load test on both sides to guarantee the safety and stability of the module.

Standard fixture:

Width: Fixture A length≥60mm, Fixture B length≥60mm； Thickness:≥3mm
Fixture pressing surface length:≥12mm； Material: Aluminum alloy; Bolt: M8
Rubber Gasket: EPDM; Torque range: 20–30 N·m

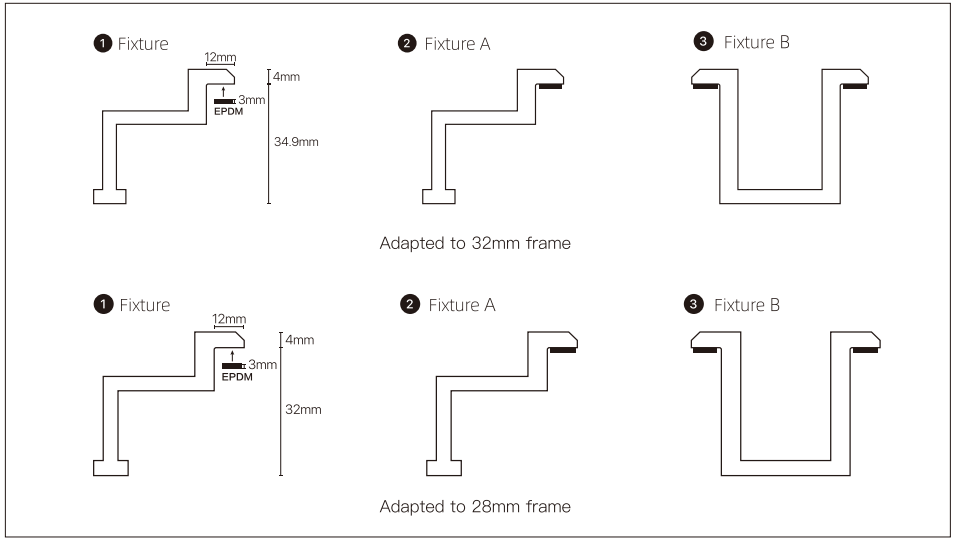

(Figure 3: Fixture Diagram of Full–Screen PV Module)

b) When installing the photovoltaic module, ensure that the fixture does not come into contact with the glass to prevent scratches, glass damage, or frame deformation from excessive torque applied. The surface of the fixture in contact with the front side of the frame must be smooth and flat to prevent uneven stress on the fixture, thus ensuring its stability. At the same time, avoid the shadow-blocking effect of the fixture, which affects the efficiency of power generation. Finally, ensure the drain holes are not blocked by the fixture.

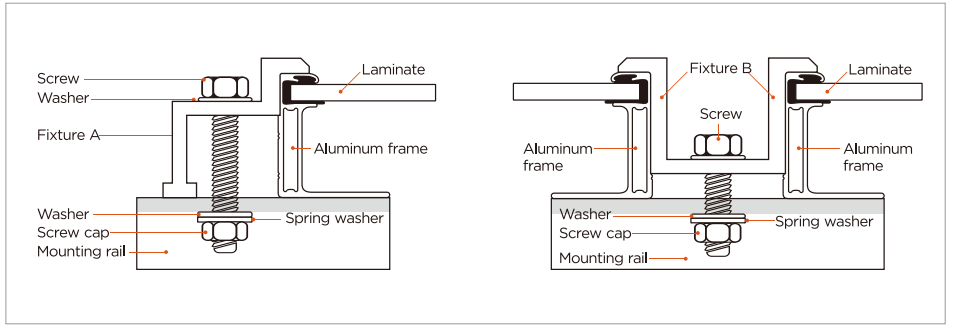

(Figure 4: Regular PV Module Fixture Installation Diagram)

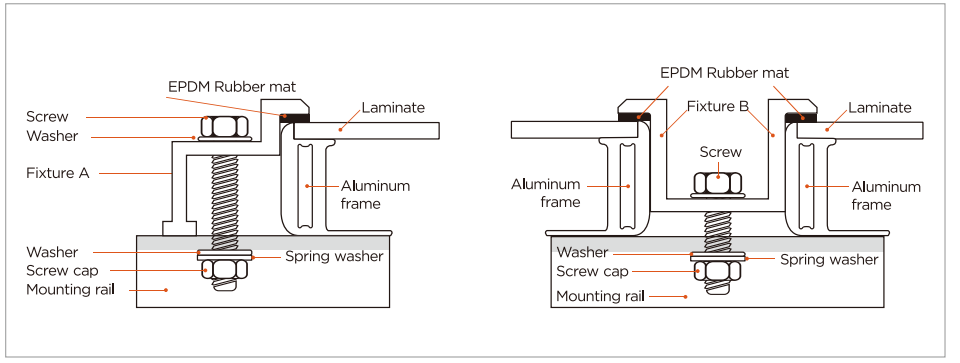

(Figure 5: Full-Screen PV Module Fixture Installation Diagram)

4.3.3 Installation Examples and Corresponding Loads of the Modules

The module can be installed using bolts and fixtures. The following table shows detailed installation positions and corresponding loads (the distances and lengths in the following table are in millimeters (mm) and the pressures are in Pa).

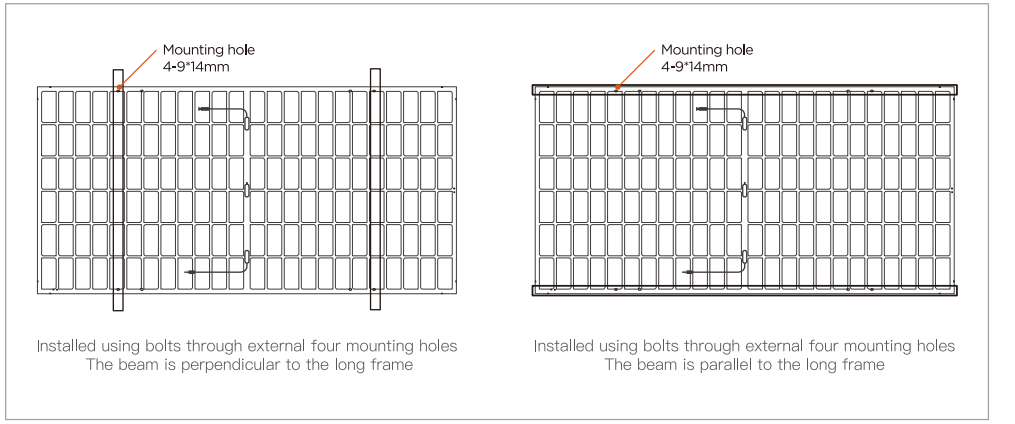

Installed using bolts through external four mounting holes
The beam is perpendicular to the long frame

Installed using bolts through external four mounting holes
The beam is parallel to the long frame

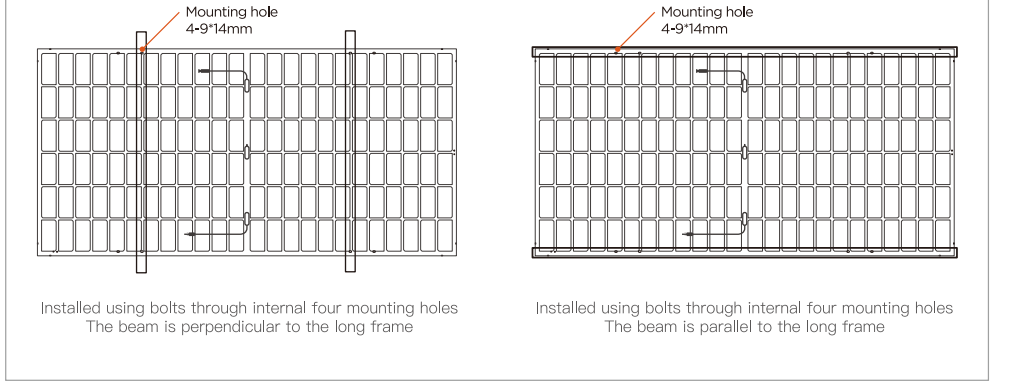

Installed using bolts through internal four mounting holes
The beam is perpendicular to the long frame

Installed using bolts through internal four mounting holes
The beam is parallel to the long frame

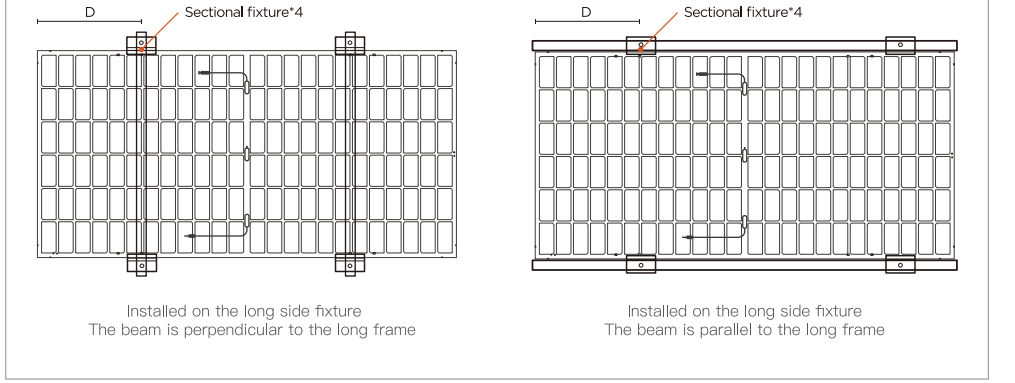

Installed on the long side fixture
The beam is perpendicular to the long frame

Installed on the long side fixture
The beam is parallel to the long frame

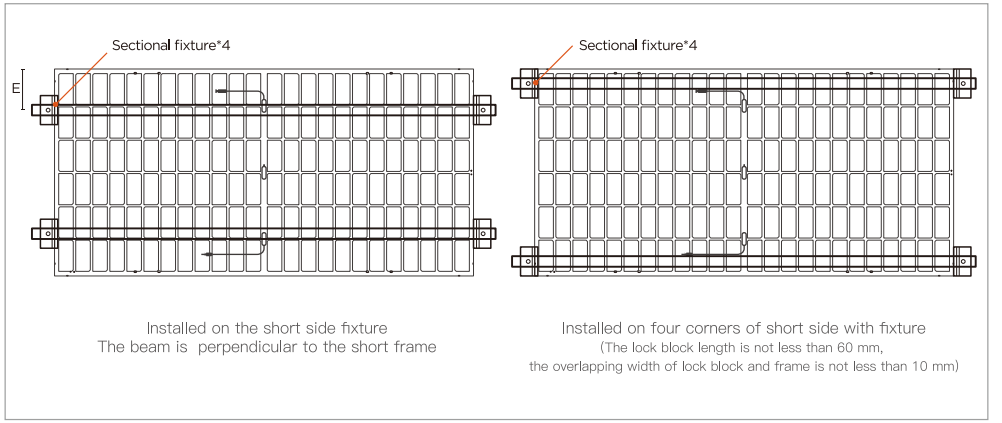

Installed on the short side fixture
The beam is perpendicular to the short frame

Installed on four corners of short side with fixture
(The lock block length is not less than 60 mm,
the overlapping width of lock block and frame is not less than 10 mm)

The load information of framed module is shown in the table below:

Module Model \ Installation Method		Installation with Bolts		Installation with Fixtures		
		Beam perpendicular to the long frame		Beam perpendicular to the long frame	Beam perpendicular to the short frame	Four corners of short side
		External four holes	Internal four holes	350≤D≤450	150≤E≤250	/
54 Regular Modules	DHN-54X16	±2400	+5400/-2400	+5400/-2400	±2400	+2400/-1800
	DHN-54R18			+5400/-2400		
	DHM-54X10			+5400/-2400		
	DHN-54R20			+5400/-2400		
	DHN-54X16/DG			+5400/-2400		
	DHN-54R18/DG			+5400/-2400		
	DHM-54X10/DG			+5400/-2400		
	DHN-54R20/DG			+5400/-2400		
54 Full–Screen Modules	DHM-54X10/FS	±2400	+5400/-2400	+5400/-2400	±1600	±1600
	DHN-54X16/FS			+5400/-2400		
	DHN-54R18/FS			+5400/-2400		
	DHN-54R20/FS			+5400/-2400		
	DHN-54X16/DG/FS			+5400/-2400		
	DHN-54R18/DG/FS			+5400/-2400		
	DHN-54R20/DG/FS			+5400/-2400		
56 Full–Screen Modules	DHM-T56X10/FS	±2400	+5400/-2400	+5400/-2400	±1600	±1600
	DHN-T56X16/FS			+5400/-2400		
60 Regular Modules	DHN-60X16	±2400	+5400/-2400	+5400/-2400	±2400	+2400/-1800
	DHN-60R18			+5400/-2400		
	DHM-60X10			+5400/-2400		
	DHN-60R20			+5400/-2400		
	DHN-60X16/DG			+5400/-2400		
	DHN-60R18/DG			+5400/-2400		
	DHM-60X10/DG			+5400/-2400		
	DHN-60R20/DG			+5400/-2400		
60 Full–Screen Modules	DHM-60X10/FS	±2400	+5400/-2400	+5400/-2400	±1600	±1600
	DHM-T60X10/FS			+5400/-2400		
	DHN-60X16/FS			+5400/-2400		
	DHN-T60X16/FS			+5400/-2400		
	DHN-60R18/FS			+5400/-2400		
	DHN-60R20/FS			+5400/-2400		
	DHN-60X16/DG/FS			+5400/-2400		
	DHN-60R18/DG/FS			+5400/-2400		
	DHN-60R20/DG/FS			+5400/-2400		

Module Model \ Installation Method		Installation with Bolts			Installation with Fixtures	
		Beam perpendicular to the long frame	Beam parallel to the long frame		Beam perpendicular to the long frame	Beam parallel to the long frame
		External four holes	External four holes	Internal four holes	450≤D≤550	500≤D≤600
72 Regular Modules	DHN-72X16	+5400/-2400	+3600/-2400	±2400	+5400/-2400	+3600/-2400
	DHN-72R18					
	DHM-72X10					
	DHN-72R20					
	DHN-72X16/DG					
	DHN-72R18/DG					
	DHM-72X10/DG					
	DHN-72R20/DG					
72 Full–Screen Modules	DHM-72X10/FS	+5400/-2400	+3600/-2400	±2400	+5400/-2400	+3600/-2400
	DHM-T72X10/FS					
	DHN-72X16/FS					
	DHN-T72X16/FS					
	DHN-72R18/FS					
	DHN-72R20/FS					

72 Full-Screen Modules	DHN-72X16/DG/FS	+5400/-2400	+3600/-2400	±2400	+5400/-2400	+3600/-2400
	DHN-72R18/DG/FS					
	DHN-72R18/FS					
	DHN-72R20/DG/FS					

Installation Method / Module Model		Installation with Bolts	Installation with Fixtures	Installation with Bolts	Installation with Fixtures
		Two beams		Three beams	
		Beam perpendicular to the long frame		Beam perpendicular to the long frame	
		External four holes	550≤D≤650	External four holes	550≤D≤650
78 Regular Modules	DHN-78X16/DG	+3600/-1600	+3600/-1600	+5400/-2400	+5400/-2400

4.3.4 Precautions

a) Please note that all installation methods described in this installation manual are provided as a reference for installing the PV modules. For design and installation details and precautions regarding PV power plant systems, please consult the project developer or relevant technical personnel. For specific technical guidance, please consult the project's technical team.

b) Before installing the modules, please confirm the following:
i. Before installation, check for any insects, debris, or the safety performance of the junction box, and address any issues found.
ii. Check whether the serial numbers of the modules are complete and correct.

c) The front design load for the DAH Solar PV module (specific model as indicated in this document) is 3600Pa for snow/wind load, and the back design load is 1600Pa, with a safety factor of 1.5. If the environment for module installation is snowy and windy that over design load, special protection measures should be taken to meet the actual requirements.

Wiring and Connections

5.1 Before starting the installation, carefully read the operation manual of the solar power system. Based on the user's requirements for system power, current, and voltage, use multi-port connection cables to connect the modules in series or parallel.

5.2 When connecting in series, choose solar modules with the same current rating. The voltage produced by the series-connected modules should not exceed the maximum allowable voltage for the system. The number of modules connected in series depends on the system design, inverter type, and environmental conditions.

5.3 The maximum rated fuse current for each series of modules is indicated on the product label and specification sheet. The rated fuse current corresponds to the maximum reverse current that the module can withstand. Match appropriate fuses based on the maximum fuse current and local electrical installation requirements to protect the series and parallel-connected modules in the circuit.

5.4 According to the installation instructions of the PV control system, open the connectors of the control system and connect the cables of the PV array to the connectors. The cross-sectional area and capacity of the cable must meet the maximum short-circuit current of the PV array (for individual modules, the cross-sectional area of the cable is 4mm^2, and the rated current should be greater than 10A). Otherwise, the cable and connector may overheat. (Note: The maximum temperature of the cable is 85℃.)

5.5 When installing the PV modules, please comply with the electrical connection regulations of the installation site.

5.6 The modules are equipped with bypass diodes. Incorrect installation may damage the diodes, cables, and junction boxes.

Maintenance

Solar PV modules need regular inspections and maintenance, especially during the warranty period. To ensure optimal performance, DAH Solar recommends the following maintenance measures:

6.1 Visual inspection

Please carefully check whether the modules for any visual defects, paying attention to the following:

a) The corner protectors of the modules are part of the transportation protection and are not subject to visual control. Customers can choose to remove or retain them.
b) Check if the module's glass is damaged, if there is contact with sharp objects on the module surface, and if the module is obstructed or covered by obstacles or foreign materials.
c) Check whether there is corrosion near the cell busbars (This type of corrosion is caused by damage to the module surface encapsulation material during installation or transportation, which allows moisture to penetrate the module).
d) Check whether the fixing screws between the module and the bracket are loose or damaged, and adjust or repair them in time.

6.2 Cleaning

a) Accumulation of dust or dirt on the module surface will reduce power output. It is recommended to regularly clean the modules. Depending on the actual situation, it is recommended to perform regular cleaning once a year to reduce the occurrence of stubborn stains such as bird droppings. When cleaning solar PV modules, please use soft cleaning tools or equipment and avoid using mineral water or acidic water for rinsing to prevent issues such as calcium buildup on the module's surface.

b) Under no circumstances should rough cleaning tools be used to clean the modules to avoid scratching or damaging them.
c) PV modules generate electricity under sunlight. To reduce the risk of electric shock or burns, it is recommended to clean the modules in the early morning or evening when the sunlight is weaker or the temperature is lower, especially in areas with high temperatures.
d) Do not attempt to clean PV modules with characteristics such as broken glass or exposed wires to avoid the risk of electric shock.

6.3 Inspection of connectors and cables

To ensure the safe, stable, and efficient operation of the power plant, we recommend performing preventive maintenance every six months, as follows:

a)Check the sealant of the junction box to ensure there are no cracks or gaps.
b) Check for signs of aging in the PV modules, including possible damage by rodents and weathering, and whether all connectors are tightly connected and free of corrosion. Check if the modules are properly grounded.

Electrical Installation

7.1 The electrical parameters of the solar PV modules, such as Isc, Voc, and Pmax, have a nominal value with an error of ±3% under standard test conditions. Standard test conditions for the module: irradiance 1000 W/m2, cell temperature 25℃, air mass AM1.5.

Under normal circumstances, the current and voltage values generated by the module may be higher relative to the values obtained under the standard test conditions of the module. Therefore, when determining the components of a photovoltaic power generation system related to rated voltage, cable capacity, fuse capacity, and module power output, the corresponding short-circuit current and open-circuit voltage should be amplified by a factor of 1.25 before application.

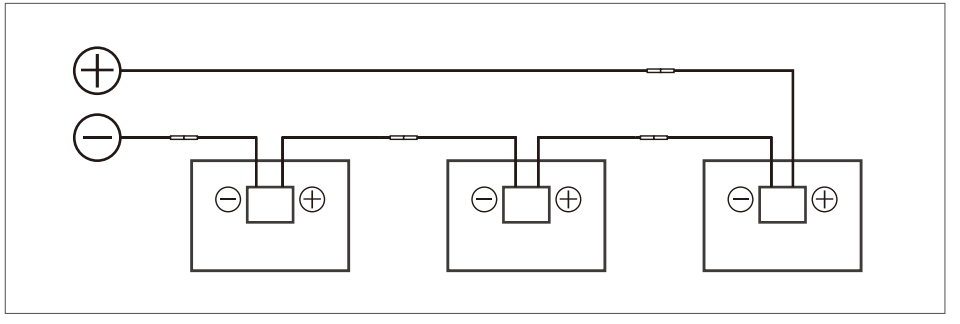

(Figure 6: Series connection diagram)

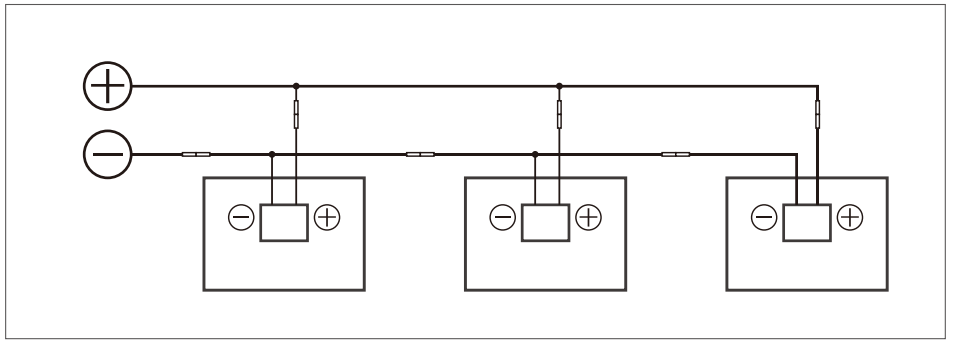

(Figure 7: Parallel connection diagram)

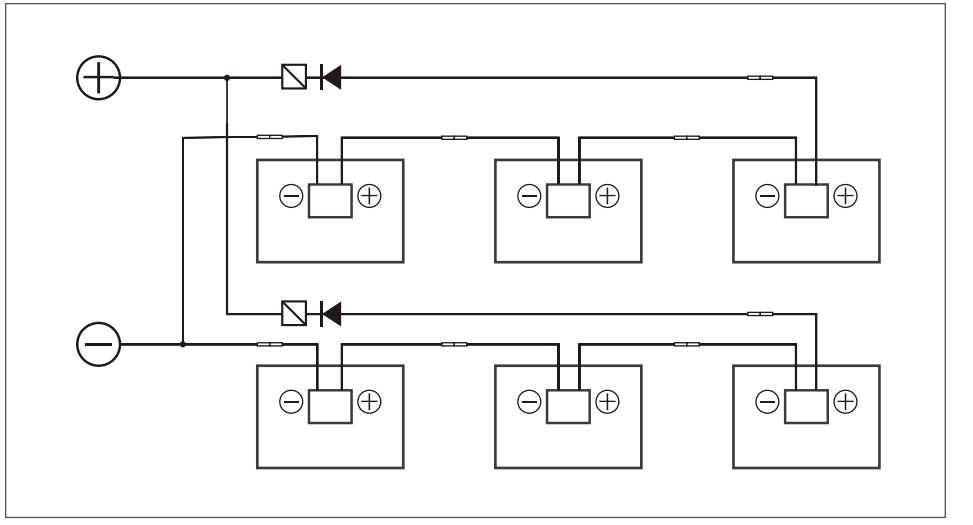

(Figure 8: Series-parallel connection diagram)

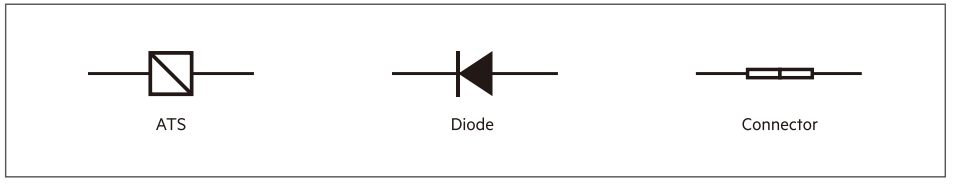

(Figure 9: Diagram of module connection terminals)

7.2 The maximum number of modules that can be connected in series in each string must be calculated according to the relevant requirements. Its open–circuit voltage value under the expected lowest temperature conditions locally cannot exceed the maximum system voltage value specified by the module (according to the IEC61730 safety test, the maximum system voltage of DAH Solar module is DC1000V) and other requirements of DC electrical modules.

7.3 The open–circuit voltage correction factor can be calculated according to the following formula: CVoc=1– β Vocx(25–T). T is the expected lowest ambient temperature at the system installation site, and β(%/℃) is the temperature coefficient of the selected module's open–circuit voltage (refer to the corresponding module parameter table).

7.4 If there is a situation where the maximum rated fuse current of the module is exceeded or reverse current flows through the module, an overcurrent protection device of equal specifications must be used to protect the module. If the number of parallel connections is equal to or greater than 2 strings, there must be an overcurrent protection device on each module.

Precautions for Handling and Installation of the Modules

8.1 Key precautions

8.1.1 When the module is laid flat or inclined, the glass should face upwards to prevent the glass from being crushed. At the same time, corner protectors should be used to provide spacing between modules.
8.1.2 During module transportation, handle with care to ensure that the glass is not subject to excessive force. Do not drop heavy objects on the glass of the module.
8.1.3 When using pressure blocks for module installation, it is necessary to apply the EPDM gasket provided by DAH Solar.

8.2 Precautions for module transportation

8.2.1 Upon arrival of the module transportation vehicle at the designated unloading location, first confirm whether the number of packages matches the delivery note. Check the external packaging of the modules for any deformation, collisions, damage, scratches, etc., and make records. Before unloading, provide safety instructions to the unloading personnel and check whether they are in good mental condition. Ensure that the personnel have complete personal protective equipment and check if the lifting machinery is working properly.

8.2.2 When unloading the modules using a forklift, pay attention to the height of the forklift forks. Avoid touching the module box during forward movement, as it may puncture the box and cause module breakage. The forks should enter from the bottom of the pallet, slowly lift it, and observe the surroundings before proceeding to the next action to avoid collisions.

8.2.3 Throughout the entire transportation process, ensure that the modules are not subjected to significant vibrations, as vibrations can damage the modules or cause hidden cracks in the solar cells within the modules.

8.2.4 Throughout the entire transportation process, avoid any impact or dropping of the modules, as external forces can damage the modules or the solar cells within them.

8.2.5 The modules should be placed on flat and solid grounds, avoiding any tilting or tipping, and ensuring that the area where the PV modules are placed does not affect road traffic.

8.2.6 Check the slings and wire ropes for any damage and strictly prohibit the use of slings and wire ropes with insufficient load–bearing capacity or signs of damage.

8.2.7 Lifting operations generally use cranes with a capacity of 20 tons or more, depending on the roof height. Only one box of modules can be lifted at a time, and stacking during transportation is strictly prohibited to prevent tipping.

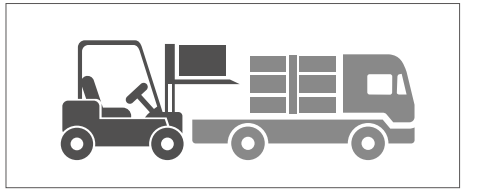

(Figure 10: Image of forklift transportation)

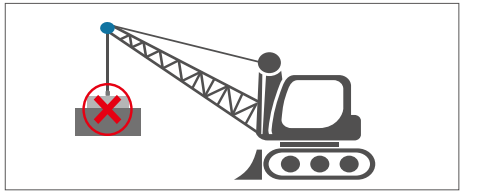

(Figure 11: Incorrect diagram illustrating transportation of stacked boxes using crane)

8.3 Unpacking and stacking of modules

8.3.1 The modules should not be flatly stacked together. For unpacking, the modules can be placed with the long edge leaning against a solid and stable wall, bracket, or another tray of unpacked components with the same specifications, with a distance of approximately 15–20cm. Before removing the packing straps, ensure that someone is holding and stabilizing the PV modules to prevent them from tipping over.

8.3.2 After removing the plastic film from the top of the box cover, use a cutting tool to cut the plastic–steel packing strap. Do not pull the packing strap forcefully to avoid uneven stress on the module.

8.3.3 When transporting and placing the unpacked modules, ensure that the modules are placed flat. The first module should have the glass side facing upwards, with a wooden pallet placed underneath. Avoid tilting or suspending the modules. Do not squeeze or pull the module's lead wires and plugs. For the second and subsequent modules, place them with the glass side facing downwards. The stacking should not exceed 26 pieces, and ensure that the four corners are aligned during stacking.

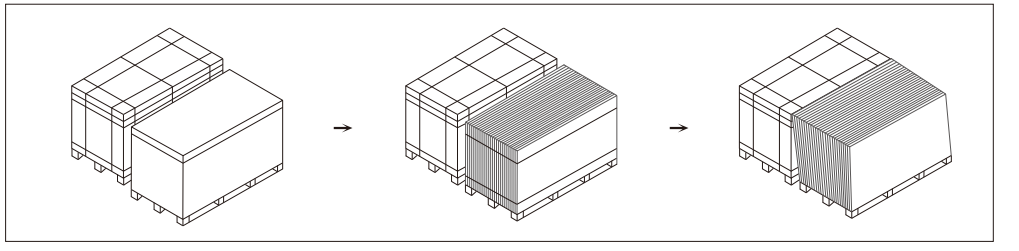

(Figure 12: Diagram of module placement)

Module Disassembly and Packaging

9.1 Module disassembly

9.1.1 Before installation, ensure that each worker wears appropriate personal protective equipment and gloves. Do not touch the electrified metal parts without permission.
9.1.2 Before disassembling the modules, disconnect the power, separate the quick connectors, secure the four-square cables, take waterproof measures, and use adhesive tape to secure the positive and negative terminals on the back of the solar panel. Then proceed with module disassembly.
9.1.3 During disassembly, strictly follow the regulations. Two people stand on each side. One person should remove the screws while another person supports the module to prevent it from tipping over. When the disassembled modules are leaned against a support, avoid scratching them against the support.
9.1.4 When transporting modules, the modules should be placed vertically. Two people should hold the frame with both hands at the same time. Do not pull the cables. Avoid violent bumps and vibrations during module movement.
9.1.5 It is strictly prohibited to step on the modules or subject them to impact. Do not touch the glass side with fingers to avoid leaving fingerprints. Do not place any other items on the modules.
9.1.6 Do not attempt to disassemble the modules or remove any labels on them.

9.2 Check before packaging the modules

9.2.1 Check whether the modules are in good condition.
9.2.2 Check if the model and specifications meet the sampling requirements.

9.3 Packaging and transportation requirements for modules

9.3.1 The outer packaging should be placed on the corresponding pallet cardboard used in the construction project and securely fastened with straps.
9.3.2 Use corner protectors for inner packaging to protect the products from damage during transportation and storage.
9.3.3 The module boxes should be placed in a single layer.
9.3.4 After placing the module boxes, cover them with waterproof cloth and take waterproof and windproof measures.
9.3.5 Ensure safety measures are taken to prevent tilting, overturning, shaking, and damage to protective surfaces during lifting.
9.3.6 Take measures to prevent tipping when placing module boxes on vehicles.

Disclaimer

This manual specifies the design, installation, operation, use, and maintenance standards for DAH Solar's modules. It does not serve as a reference or limiting standard for other equipment within the photovoltaic system. DAH Solar assumes no legal liability for any personal or property damages resulting from failure to comply with the installation, operation, use, and maintenance instructions provided in this manual or for disputes unrelated to quality defects in DAH Solar products.
Intellectual property: DAH Solar does not assume any responsibility for infringement of intellectual property rights or other rights of third parties that may arise from the use of module products. Customers do not obtain any intellectual property rights or related usage authorization by using DAH Solar products, whether expressly or impliedly.
DAH Solar reserves the right to modify manuals, PV products, specifications, or product information. Any modifications to the information may arise from business requirements, technological advancements, or other objective circumstances, but they do not negate the original information.
The information in this manual is based on knowledge and experience deemed reliable by DAH Solar, including but not limited to all the information and related suggestions above. However, all such information and related suggestions, whether express or implied, do not represent the exclusive or proprietary methods and do not constitute any safety or quality assurance.


Solar